REV.	DESCRIPTION	DATE	DRAWING
0	New Drawing	2026.09.10	jk Kim

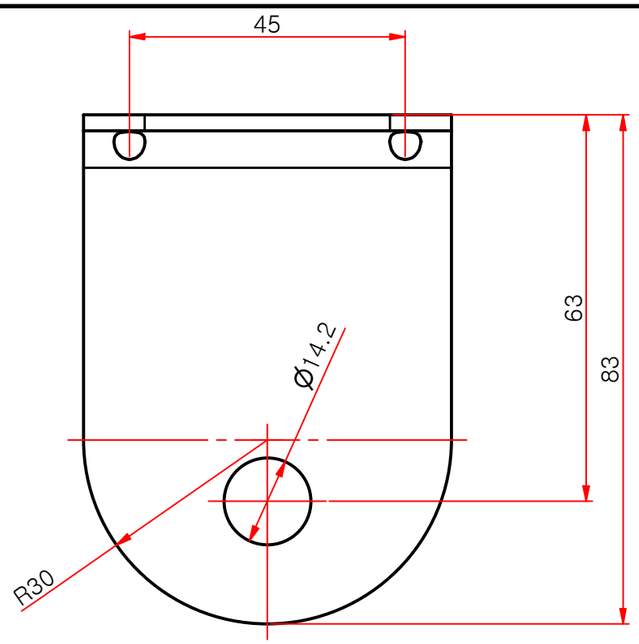

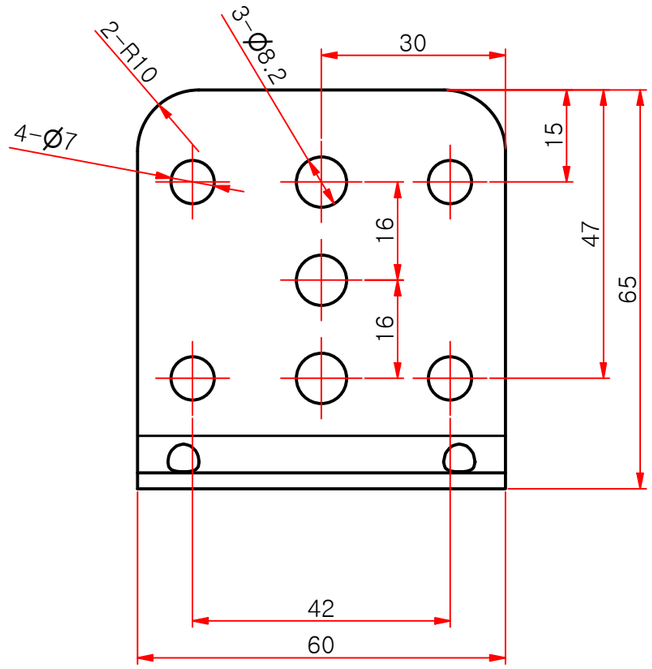

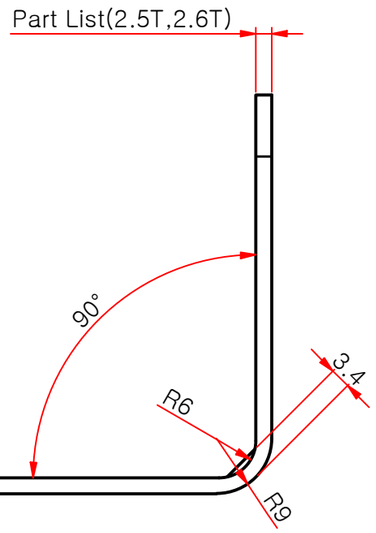

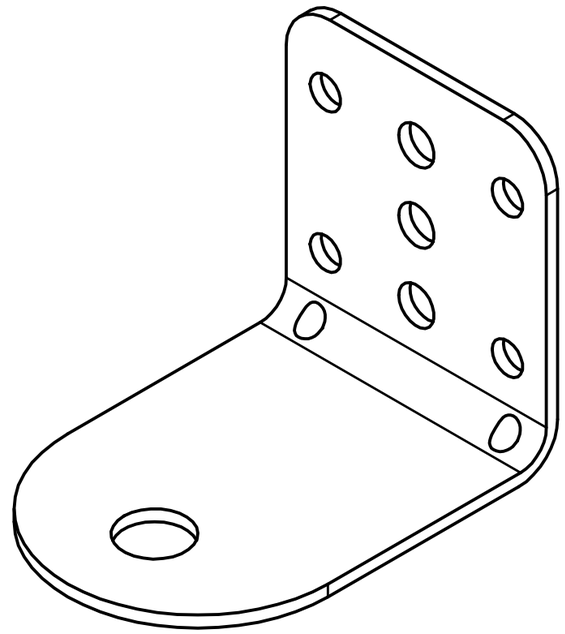

PART LIST					
No.	PART NO.	DESCRIPTION	DIMENSION(mm/inch)	MATERIAL	WEIGHT(kg)
1	M1-613-B002_A	Mounting Bracket, "L"Shape	83x60x65mm 2.6T	Steel /Natural Zinc	
2	M1-613-B002-SUS_A	Mounting Bracket, "L"Shape	83x60x65mm 2.5T	SUS	0.151

Quantity	1	Material	Refer to Part List	WEIGHT (kg)	Project Name : ACCSESSORY
		Finish	–	Refer to Part ist	
		Scale	Unit	Drawing: jk Kim / Date: 2026.09.10	Drawing Name : B002, B002-S
		1 / 1	mm	Checked / Date	Drawing No : KLT-B001-B030 / Sheet / Sheets 1/1
KLT Co., Ltd.				Approved: yi Kim / Date: 2026.09.10	Part No : PART LIST 참조 / REV. 0

DIMENSIONAL TOLERANCE			
D / G	A	B	C
251~1000mm	±0.3	±0.8	±1.5
64~250mm	±0.2	±0.5	±0.7
17~63mm	±0.1	±0.3	±0.5
5~16mm	±0.07	±0.2	±0.35
1~4mm	±0.05	±0.1	±0.25